WWW.PAOLOEMILIOZZI.IT (.COM) FACEBOOK.COM/DIDATTICA

LEZIONI PRIVATE 346/3103392

R_s? $V_{OUT}=0$ $V_{IN}=0$

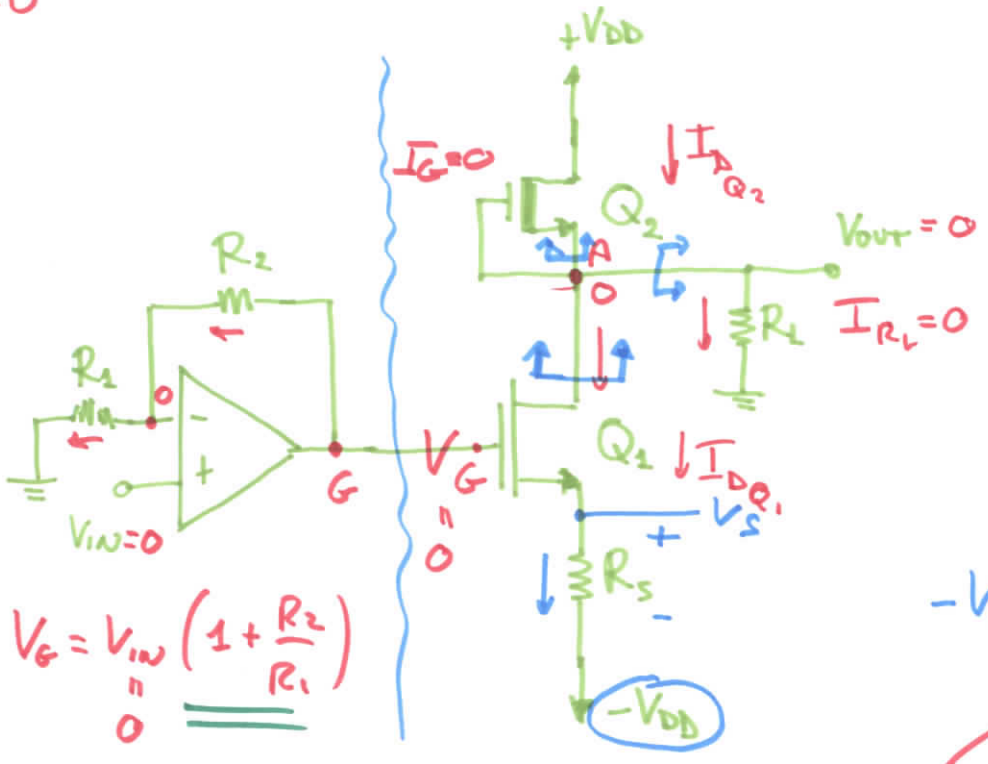

$V_G = V_{IN}\left(1+\frac{R_2}{R_1}\right)$, $V_{IN}=0$, $V_G=0$

$I_{DQ_2} = I_{DQ_1}$

$k_2(-V_{T_2})^2 = k(V_{GS}-V_T)^2$

$V_G - V_S$, $V_G = 0$

$R_S = \ldots$

$-V_{DD} + R_S \cdot I_{DQ_1}$

$A_V = \frac{v_{OUT}}{v_{IN}}$

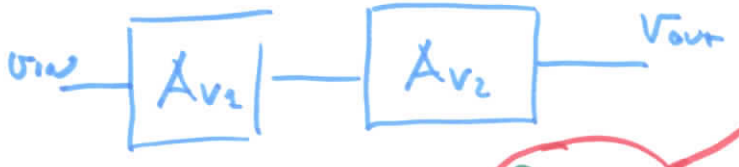

$R_L // \infty = R_{carico} = R_L$

$$A_V = 1+\frac{R_2}{R_1} \cdot \frac{-g_m R_{carico}}{1+g_m R_S}$$

$A_{V_1} \cdot A_{V_2}$

Q_2

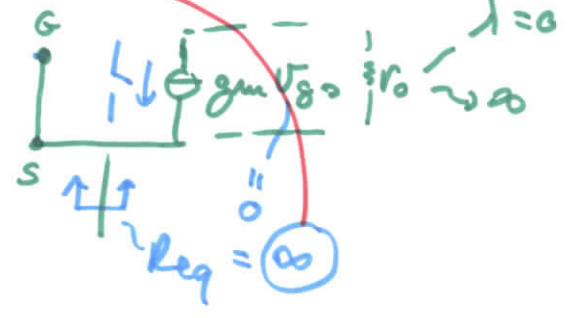

ELE1prove01A000201.mpg